C.I.P.	5,45 x 39 Country of Origin: SU	TAB.	I
		Date	92-07-23
		Revision	02-05-15

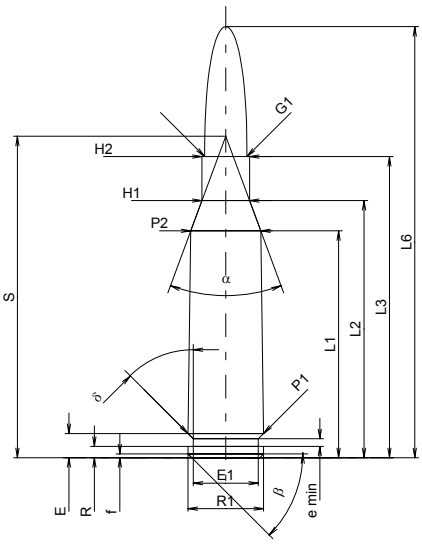

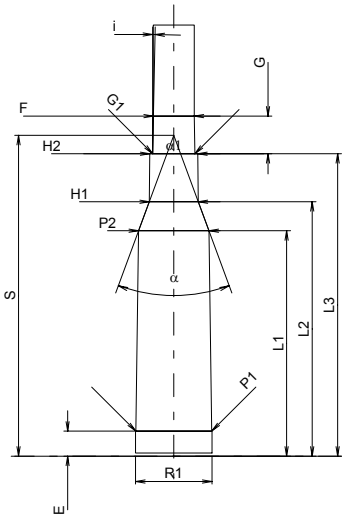

Scale 1:1

CARTRIDGE MAXI

Lengths

L1 1)*	=	30.00	-0.20
L2 1)*	=	34.00	-0.20
L3 1)	=	39.82	
L4	=		
L5	=		
L6	=	57.00	

Case Head

R	=	1.50
R1	=	10.00
R3	=	
E	=	3.20
E1	=	8.60
e min	=	1.00
δ	=	45°
f	=	0.50
β	=	45°

Powder Chamber

P1	=	10.00	
P2 1)*	=	9.25	-0.20

Junction Cone

α	=	40°36'32"
S	=	42.50
r1 min	=	
r2	=	

Collar

H1 *	=	6.29
H2 1)	=	6.29

Projectile

G1 1)	=	5.60
G2	=	
F	=	
L3+G 1)	=	44.79

Pressures (Energies)
Method Transducer

Pmax	=	3800	bar
PK	=	4370	bar
PE	=	4750	bar
M	=	17.50	
EE	=	1505	Joule

Miscellaneous Dimensions

Fe 1)	=	0.15
delta L	=	

CHAMBER MINI

Lengths

L1 *	=	29.80
L2 *	=	33.65
L3 1)	=	40.00

Breech

R	=	1.50
R1	=	10.10
R2	=	
R3	=	
r	=	

Powder Chamber

E	=	3.30
P1 1)	=	10.05
P2 *	=	9.30

Junction Cone

α 1)	=	40°29'27"
S	=	42.41
r1 max	=	
r2	=	

Collar

H1 *	=	6.46
H2 1)	=	6.32

Commencement of Rifling

G1 1)*	=	5.60
G 1)*	=	4.97
α1	=	180°
h	=	
s	=	
i 1)	=	1°09'10"
w	=	

Barrel

F 1)*	=	5.40
Z 1)	=	5.60

Grooves

b	=	2.60	
N	=	4	
u	=	255.00	
Q	=	23.99	mm²

Dimensions in << mm >>
Dimensions and Tolerances for Proof Barrels
see Appendix CR 1.

Notes: 1) Check for safety reasons
* Basic dimensions

Reproduction forbidden as well as in the form of extracts without approval of C.I.P.